Interstate Oil & Gas Compact Commission

2017 Annual Business Meeting

Eureka Resources - A Sustainable Choice for Oil & Gas Wastewater Management and Byproduct Recovery

Dan Ertel, Chief Executive Officer
Jerel Bogdan, PE – VP of Engineering

Eureka Business Model Goals and Objectives

The Business Model for Eureka incorporates permitting, designing, constructing and operating comprehensive centralized oil and gas wastewater treatment facilities with the following goals and objectives:

- Continuous improvement in the management/treatment approach for oil and gas wastewaters. Where logistics are favorable, centralized treatment can be cost competitive with UIC disposal.
- Locating centralized treatment facilities in close proximity to major fairways of development activities to minimize hauling and associated costs.
- Providing customers with options for level of treatment with the goal of maximizing recycle of:
  - Pretreated Wastewater - water treated to reduce the suspended solids
  - Distilled Wastewater - water treated to remove dissolved solids
  - Concentrated $CaCl_2$ Brine - heavy (over 10.5 pounds per gallon) water that is very high in dissolved solids
  - De-Wasted Water - water that meets freshwater standards – WMGR123 Appendix A Limits

Eureka Business Model Goals and Objectives (Cont.)

- Providing a discharge option that returns as much water as possible to the hydrologic cycle.
- Maximizing recovery and beneficial reuse of recoverable by-products (co-products) such as methanol, sodium chloride (salt) and calcium chloride.
- Reduction of the long-term costs associated with treatment and recycling of oil and gas wastewaters.

History of Eureka Resources – Centralized Treatment

Initial Facility Placed in Operation in 2008

- Located In Williamsport (Second Street), PA
- Physical/Chemical Pretreatment Capability Only
- Indirect Discharge to Williamsport Sewer Authority (WSA)
- 5000 BPD Capacity

2010 Expansion of Williamsport Second Street Facility

- 10,000 BPD Capacity
- Pretreatment and NOMAD Evaporation Capability

2013 Expansion Projects

- Williamsport, PA – Reach Road Facility and Bradford County - Standing Stone Facility
- Both 10,000 BPD Permitted Capacity
- Reach Road – Initially Filtration and Storage Capability
- Standing Stone - Pretreatment Capability
- Added Waste Oil Management Capability to Second Street Facility

EUREKA RESOURCES

Centralized Treatment Approach - 2014 Expansion Projects

Standing Stone, Bradford County Facility – Crystallization and MBR/RO Capability

Williamsport Second Street Facility – Methanol Rectification Capability

Eureka Facilities Location Map

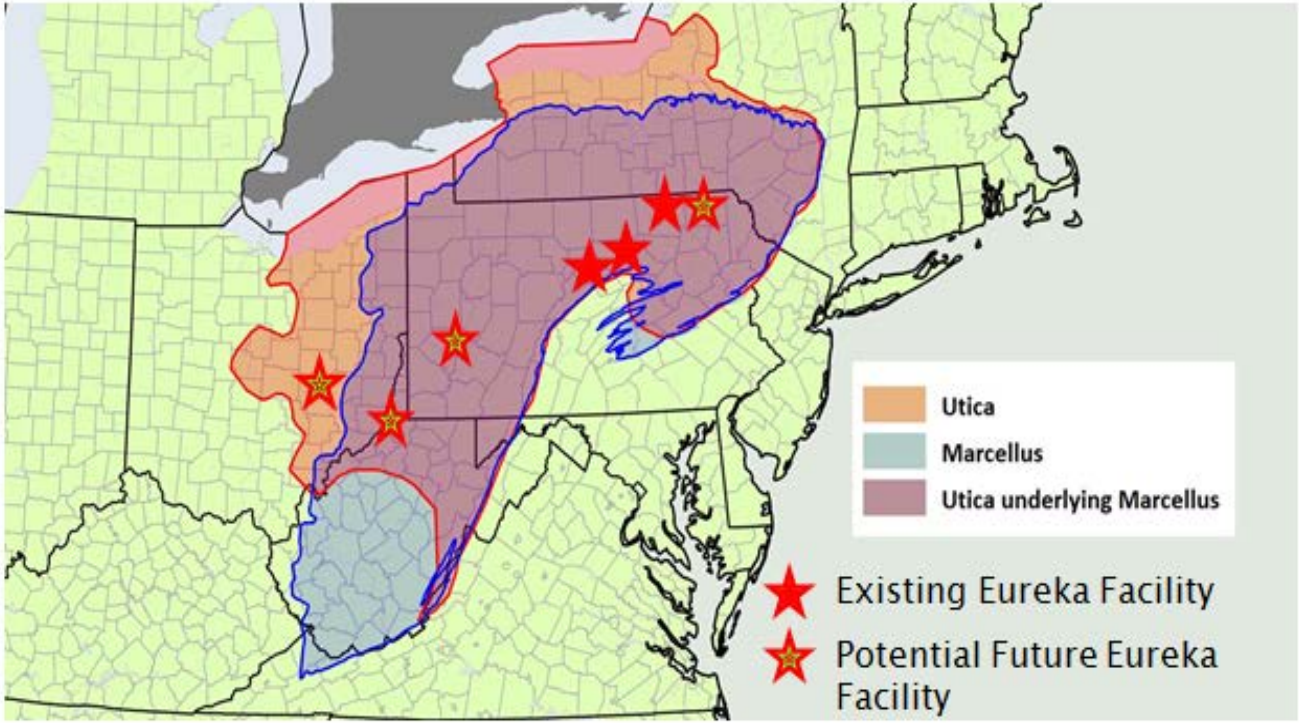

Treatment Approach For Maximizing Recycle and Beneficial Reuse

- Pretreatment (phys–chem) of Raw Wastewater
  - → Reuse as drilling/development fluid
  - → Recover methanol for reuse
  - → Recover oil for reuse
- Secondary Treatment of Pretreated Wastewater (Evaporation and Crystallization)
  - → Reuse as drilling/development fluid
  - → POTW indirect discharge
  - → Concentrated brine reused as fluid for hydraulic fracturing
  - → Advanced brine management (crystallizer)
    - → Additional distilled water.
    - → Purge brine for reuse
    - → Salts (sodium chloride, calcium chloride) for reuse
- Tertiary Treatment of Distillate (MBR/IX/RO)
  - → Unrestricted storage and reuse options
  - → Direct discharge

EUREKA RESOURCES

Eureka Typical Process Flow Diagram

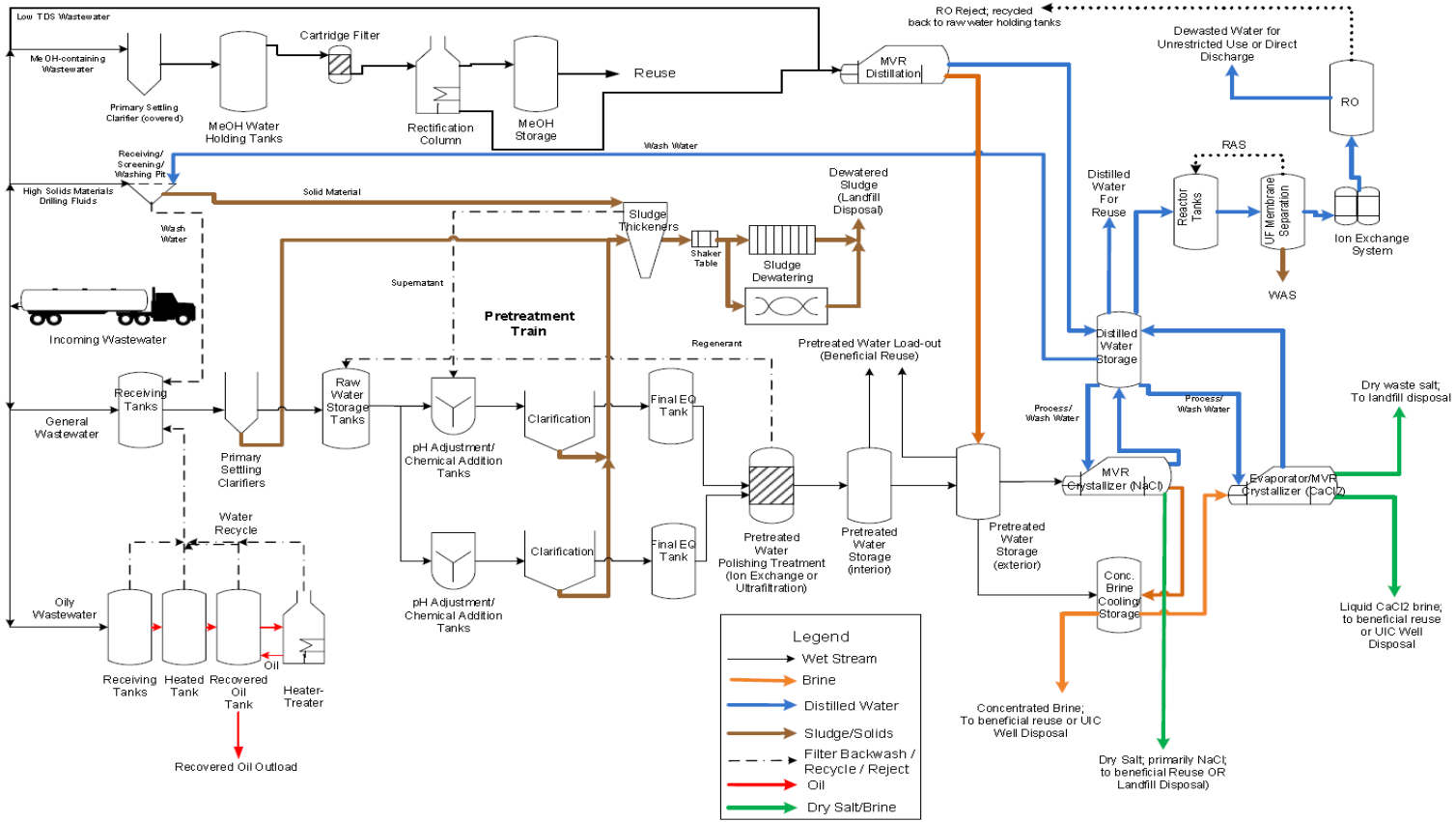

Drivers For Technology Selections

- **Regulatory Drivers:**
  - Evolving Regulatory Requirements – Drives the Need to Be Conservative
  - PADEP WMGR123 General Permit Established De-Wasting Standards
- **Business Drivers:**
  - Maximizing recovery of valuable by-products
  - Applying a level of treatment that allows return of water to the hydrologic cycle
  - Minimizing risks associated with transport/storage/UIC injection of wastewaters by E&Ps
  - Providing a sustainable choice for oil and gas wastewater treatment when injection is not an option, reuse opportunities diminish, or water supply is limited
- **Performance Drivers:**
  - High energy efficiency
  - Ability to handle a wide range of feed qualities
  - Ability to capture condensate
  - Potential for expansion in a sequential/modular fashion to achieve recovery of multiple by-products

Drivers

Lessons Learned During Implementation of Crystallization Technology

- **Mechanical Vapor Recompressions (MVR) Crystallizer Technology Vendor Selection:**
  - Domestic vs. Foreign Vendors
  - Blowers Versus Turbo-Compressors
  - Turn Down
  - Building Codes/Certifications
  - Materials of Construction
  - Fabrication
  - Understanding Boundary/Battery Limits
- **Safety**
- **By-Product Quality Control**
- **Condensate Management**
- **By-Product Market Development**
- **By-Product Management**

Co-Products/Byproducts

- **De-Wasted Water** – water treated through Eureka's entire treatment process and available for reuse, storage in freshwater impoundments or discharge to a surface water body (return to the hydrologic cycle)

- **Methanol (MeOH)** – methanol recovered primarily from compressor station waters for reuse by oil and gas companies as well as other industrial /commercial customers

- **Sodium Chloride (NaCl)** – crystallized dry salt targeted for road deicing as well as other commercial and industrial uses

- **20% Calcium Chloride (CaCl2) Brine** - Brine purge from the crystallizer targeted for recycle uses within the oil and gas industry or further processing to generate a 35% calcium chloride brine or solid prills for recycle in the oil and gas industry as well as other commercial and industrial uses

De-Wasting Demonstration

- Developed sampling plan based on WMGR123 Appendix A General Permit Requirements

- Conducted sample collection (MBR/IX/RO effluent) for the initial demonstration from July 21 through September 19, 2014:
    - Daily flow-proportional composite samples
    - Weekly flow-proportional composite samples
    - Grab samples

- Analytical results confirmed that concentrations of all parameters as required by Part C.22.b of the WMGR123 permit were lower than, equal to, or otherwise not detected when compared to the de-wasting limits included in Appendix A for all samples

- De-Wasting request letter submitted to PADEP on 10/3/14 and approved on 11/24/14

Parameter List

TOC
Aldehydes
VOCs
SVOCs
Pentanoic and Hexanoic Acids
Pesticides
PCBs
Organic Acids
Alcohols
Glycols
2 Butoxyethanol
TPH C8-C40
30 ICP Metals
Mercury
Hexavalent Chromium
Trivalent Chromium
Anions - Sulfate, Chloride, Fluoride, Bromide
Ammonia
TDS
Ra 226 and Ra 228

EUREKA RESOURCES

Effluent Characterization for Center for Responsible Shale Development (CRSD) Certification

CENTER FOR RESPONSIBLE SHALE DEVELOPMENT

CRSD Effluent Characterization Approach and Results

- De-Wasting System (MBR/IX/RO) effluent samples
- Five sampling events over three weeks
- Parameter list developed by CSSD based on potential chemical constituents in produced and flow back wastewater within Appalachia Basin
- Wastewater Effluent Toxicity (WET) testing also performed

- **Basis for CRSD surface water performance standard**

Analysis	Method
TOC	EPA 415.1
Aldehydes	SW-846 8315
VOCs	SW-846 8260B with 20 non-interpretive TICs
SVOCs	SW-846 8270C with 25 non-interpretive TICs
Pentanoic and Hexanoic Acids	8270C-TLS (Library Search)
Organic Acids	SW-846 8015B (mod)
Alcohols	SW-846 8015B (mod)
Glycols	LC/MS/MS 8321AMOD
TPH C8-C40	SW-846 8015B (TPH)
30 ICP Metals	SW-846 6010B
Anions - Sulfate, Chloride, Fluoride, Bromide	EPA 300
Ammonia	EPA 350.2
TDS	SM 2540D
Ra 226 and Ra 228, dissolved, insoluble	EPA 903.1 and 904
Acrylamide	EPA 603
MBAS	Method SM 5540 C-2000
Mercury	Cold Vapor Method EPA 245.7
Nonylphenol	WS-MS-0010
Nitrite	SW-846 9056/A

EUREKA RESOURCES

Methanol By-Product Reuse

Methanol Rectification Column

- Eureka provides recycled methanol for the following purposes:
  - Reuse in gas field applications including compressor station operations
  - Pending a beneficial reuse determination, use as a supplemental feed at wastewater treatment plants
- Recycled methanol contains 97% methanol; less than 1% ammonia nitrogen; trace levels of BTEX, MEK, MIBK and acetone; trace levels of zinc, boron, calcium and aluminum; and water.

Salt Co-Product Reuse

Eureka provides the dry sodium chloride (NaCl) material generated from crystallizer facilities for the following uses:

- Bulk and bagged rock salt for deicing applications
- Bulk and bagged evaporated salt for various deicing applications, including make-up of pre-wetting brines
- Use as a raw material ingredient in the manufacture of various chemical products to be used for commercial/industrial/oilfield purposes (not for human consumption)
- **Meat-packing/hide processing (bulk)**
- **Commercially-sold pool salt (dried and bagged)**

Co-Product Determination - NaCl Chemical Equivalency

The chemical evaluation approach involved characterization (radionuclides, metals, organics, and inorganics) of the following:

- **Eureka's crystallized salt**

Vs.

- Bulk stockpiled road salt samples
- Bulk stockpiled "solar salt" samples
- Samples of bagged sodium chloride deicing rock salt
- Bulk sodium chloride material from a commercial/industrial using salt as a raw material in PA
- **Commercially-sold pool salt.**

- The concentration/activity level of all analytical constituents in the sodium chloride co-product produced at Eureka's Standing Stone, PA facility, with the exception of barium, were either lower, or comparable to, concentrations/activity levels in the comparative samples of sodium chloride products.

The Pool Salt Success Story – From O&G Wastewater… to Big Box Store Shelves @ Walmart and Lowes

- Multi-year deal in hand with biggest distributor of sodium chloride in North America (Scotwood Industries).
- Capital investment in salt drying and bagging processes (20 t/hr nameplate capacity).
- Currently generating 100 – 125 pallets/day of bagged product.

EUREKA RESOURCES

20% Calcium Chloride Brine

- **Product Description**: Calcium Chloride solution, 18 to 22% CaCl2 by weight, is generated by an evaporative process from liquid, mixed brine solution.

- **Product Usage**: Applications for Calcium Chloride solution are focused on oil field and gas field applications, such as well shut-in and drilling fluids.

Properties:

Analyte	Average	Range
Calcium Chloride (wt. %)	20%	18-22%
Total Alkali Chloride (wt. % as NaCl)	14%	12 -15%
Density (#/gal)	10.7	10.6-10.8
Specific gravity	1.28	1.27-1.30
pH	6.3	6.0-6.5
Total Magnesium (wt. % as $MgCl_2$)	0.15%	0-0.3%
Barium Chloride (wt. %)	0.98%	0.76-1.5%
Strontium Chloride (wt. %)	2.9%	2.17-3.26%

EUREKA RESOURCES

77 – 78% Calcium Chloride Flakes

- Eureka has completed bench/pilot scale testing demonstrating feasibility of treating/processing calcium chloride purge to generate:
  - Additional NaCl
  - Additional distilled water
  - 77 to 78% $CaCl_2$ flakes

- Currently pursuing proposals to construct a 2000 BPD $CaCl_2$ Plant

- Plan to Have $CaCl_2$ Production Facility Operational in 2017

Conclusions/Takeaways

- Eureka has demonstrated a sustainable business model for treating oil and gas wastewaters especially when injection is not an option, and when reuse opportunities and/or water supply is limited

- Eureka has learned many valuable lessons through actual design, construction and operation of numerous technologies including various pretreatment systems, distillers, and a crystallizer

- Eureka has over seven years of successful experience treating oil and gas wastewater providing:
    - A wide array of treatment options.
    - E&P companies with options for selecting the level of treatment necessary to optimize reuse options and reducing the impact on the hydrologic cycle.
    - Beneficial reuse opportunities for Co-Products (By-Products) extracted from oil and gas wastewaters.
    - A forward-thinking strategic position designed to stay at the forefront of emerging regulatory requirements

EUREKA RESOURCES

Thank You / Questions

EUREKA RESOURCES