EERC

Energy & Environmental Research Center®

Putting Research into Practice

EERC . . . The International Center for Applied Energy Technology®

Plains CO_2 Reduction (PCOR) Partnership

IOGCC 2011 Annual Meeting
Public Lands Committee

October 17, 2011

Lisa S. Botnen

© 2010 University of North Dakota Energy & Environmental Research Center.

U.S. Department of Energy
Regional Carbon Sequestration Partnerships (RCSPs)

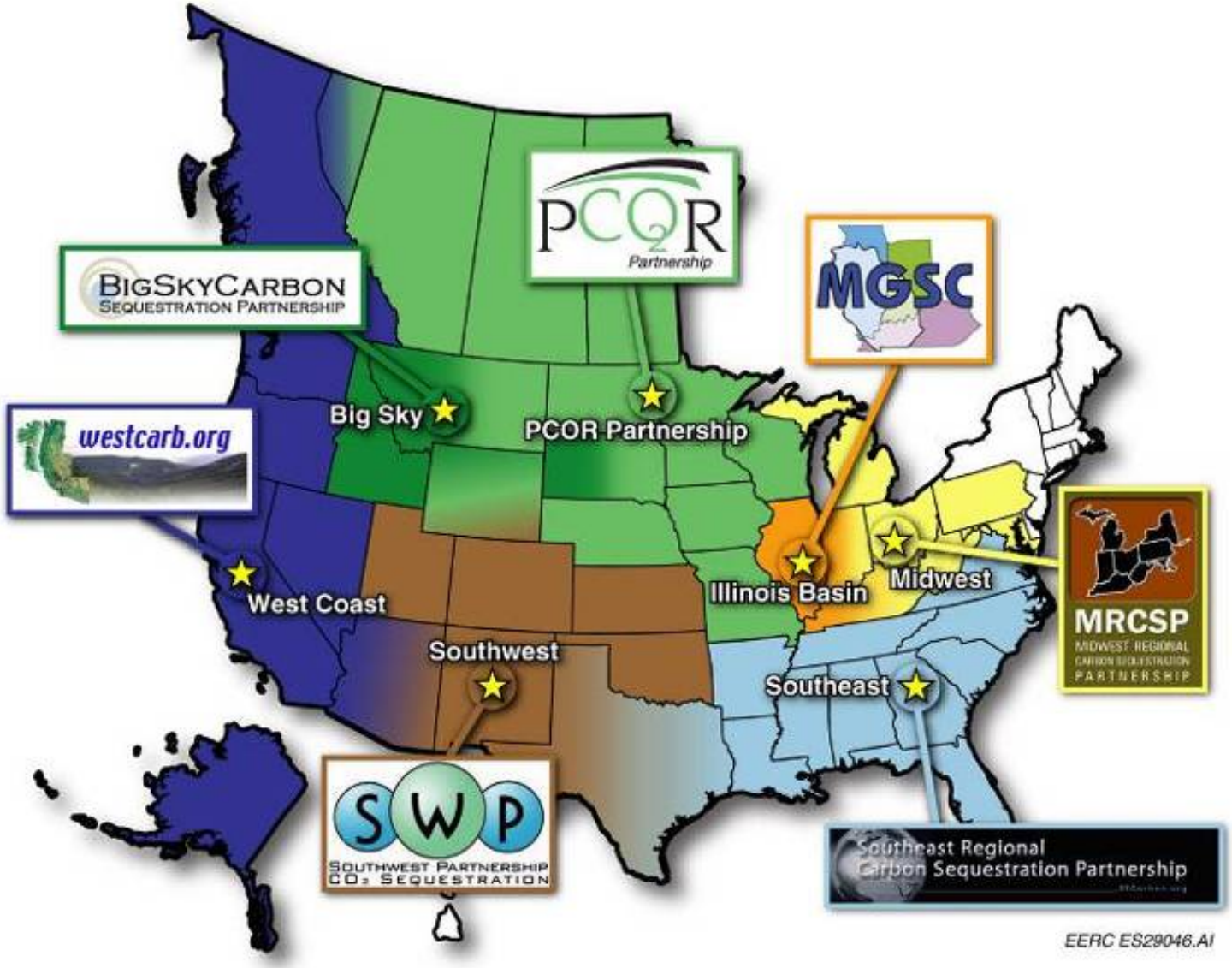

The PCOR Partnership Region

PCOR Partnership 2003 – Present

- NETL
- EERC – Energy & Environmental Research Center – Putting Research into Practice – University of North Dakota, Grand Forks
- ABENGOA BIOENERGY
- AIR PRODUCTS
- Alberta Energy
- AERI – Alberta Energy Research Institute
- Alberta Innovates Technology Futures
- ALLETE
- Ameren
- ACCCE – American Coalition for Clean Coal Electricity
- American Lignite Energy
- Apache Canada Ltd.
- Aquistore
- Baker Hughes
- Basin Electric Power Cooperative – A Touchstone Energy® Cooperative
- Bechtel
- Biorecro
- Blue Source
- BNI Coal
- British Columbia – The Best Place on Earth – Ministry of Energy, Mines and Petroleum Resources
- BC Oil & Gas Commission
- CCX – Chicago Climate Exchange
- CMG
- Dakota Gasification Company
- Denbury
- Ducks Unlimited Canada – Canada's Conservation Company
- Ducks Unlimited
- Eagle Operating Inc.
- EICCD
- Enbridge
- Encore Acquisition Company
- ERCB – Energy Resources Conservation Board
- AGS – Alberta Geological Survey
- Environment Canada
- Excelsior Energy
- Fischer Oil and Gas, Inc.
- Great Northern
- Great River Energy
- Halliburton
- Hess
- Huntsman
- Husky Energy
- Indian Land Tenure Foundation
- Kiewit
- Lignite Energy Council
- Manitoba
- Manitoba Hydro
- Marathon
- MEG Energy Corp
- Melzer Consulting
- Minnesota Pollution Control Agency
- minnesota power
- Minnkota Power Cooperative, Inc.
- Missouri Department of Natural Resources
- Missouri River Energy Services
- Montana-Dakota Utilities Co.
- Environmental Quality
- Montana Public Service Commission
- Murex Petroleum Corporation
- National Commission on Energy Policy
- Natural Resources Canada
- Nebraska Public Power District – Always there when you need us
- Nexant
- North American Coal Corporation
- North Dakota Department of Commerce – Office of Renewable Energy and Energy Efficiency
- North Dakota Department of Health
- North Dakota Geological Survey – 1895
- North Dakota Oil and Gas Division
- Industrial Commission of North Dakota – Lignite Research, Development and Marketing Program
- Industrial Commission of North Dakota – Oil and Gas Research Council
- North Dakota Natural Resources Trust
- North Dakota Petroleum Council
- NDSU – North Dakota State University
- Otter Tail Power Company
- xand – Risk Management Solutions
- ptrc – Petroleum Technology Research Centre
- PTTC – Petroleum Technology Transfer Council
- Pinnacle – A Halliburton Service
- Prairie Public
- Pratt & Whitney – A United Technologies Company
- Ramgen Power Systems
- RPS Energy
- Saskatchewan Industry and Resources
- SaskPower
- Schlumberger Carbon Services
- Shell Canada Limited
- Spectra Energy
- Strategic West Energy Ltd.
- Suncor Energy
- TAQA
- Tesoro
- TGS
- University of Alberta
- University of Regina
- USGS – science for a changing world
- Weatherford
- Advanced Geotechnology
- Western Governors' Association
- Westmoreland Coal Company
- Williston Basin Interstate Pipeline Company
- Wyoming Office of State Lands and Investments
- Xcel Energy

Field Validation Tests

Key Results

- Unminable lignite may represent CO_2 sequestration targets in the PCOR Partnership region, but more research needs to be done prior to large-scale demonstration and commercialization.
- Early exploration efforts do not support commercially viable coalbed methane potential in North Dakota lignite seams.

Key Results (cont.)

- The pinnacle reef structures employed in the Zama project represent significant opportunities for both enhanced oil recovery (EOR) and CO_2 storage.
- Monitoring, verification, and accounting (MVA) programs can be developed that are unobtrusive to commercial operations and are both technically and cost effective.

Key Results (cont.)

- Small-scale (huff ‘n’ puff-type) CO_2 injection into deep carbonate systems is technically feasible and has the potential to result in commercially viable EOR operations in the future.
- Tertiary-phase EOR is the primary near-term opportunity for managing CO_2 in the PCOR Partnership region.

Eagle Operating Inc.

Commercial-Scale Demonstration Phase

- Two 1-million-ton/year-or-greater-scale demonstrations
  - Saline
  - Enhanced oil recovery (EOR)
- Ongoing and effective public outreach
- Continuing regional characterization

Fort Nelson Organizational Chart

Commercial Partners

Regulatory Partners

BC Oil & Gas COMMISSION

BRITISH COLUMBIA
The Best Place on Earth
Ministry of Energy, Mines and Petroleum Resources

Natural Resources Canada

NETL

EERC
PCOR Partnership
Fort Nelson Demonstration

Research Partners

Spectra Energy SM

CMG COMPUTER MODELLING GROUP LTD.

RPS Energy

Alberta Innovates Technology Futures

Fort Nelson – Progress

- Drilled exploratory well - spring 2009.
- Completed second-round risk assessment - May 2011.
- Acquired additional 3-D seismic survey
- Drill additional wells winter 2011–2012?
- Inject CO_2 by April 2014.

Bell Creek Organizational Chart

Commercial Partners

EERC
PCOR Partnership
Bell Creek Demonstration

Research Partners

Denbury

BAKER HUGHES

Schlumberger Carbon Services

CMG COMPUTER MODELLING GROUP LTD.

Regulatory Partners

Wyoming Office of State Lands and Investments

Montana Board of Oil and Gas Conservation

Wyoming Oil and Gas Conservation Commission

Wyoming PIPELINE AUTHORITY

Bell Creek – Progress

Key milestones

- Developed baseline geologic model – September 2010.
- Drill monitoring well – Fall 2011
- 232-mile pipeline complete – December 2012.
- Initiate injection of CO_2 – June 2013.

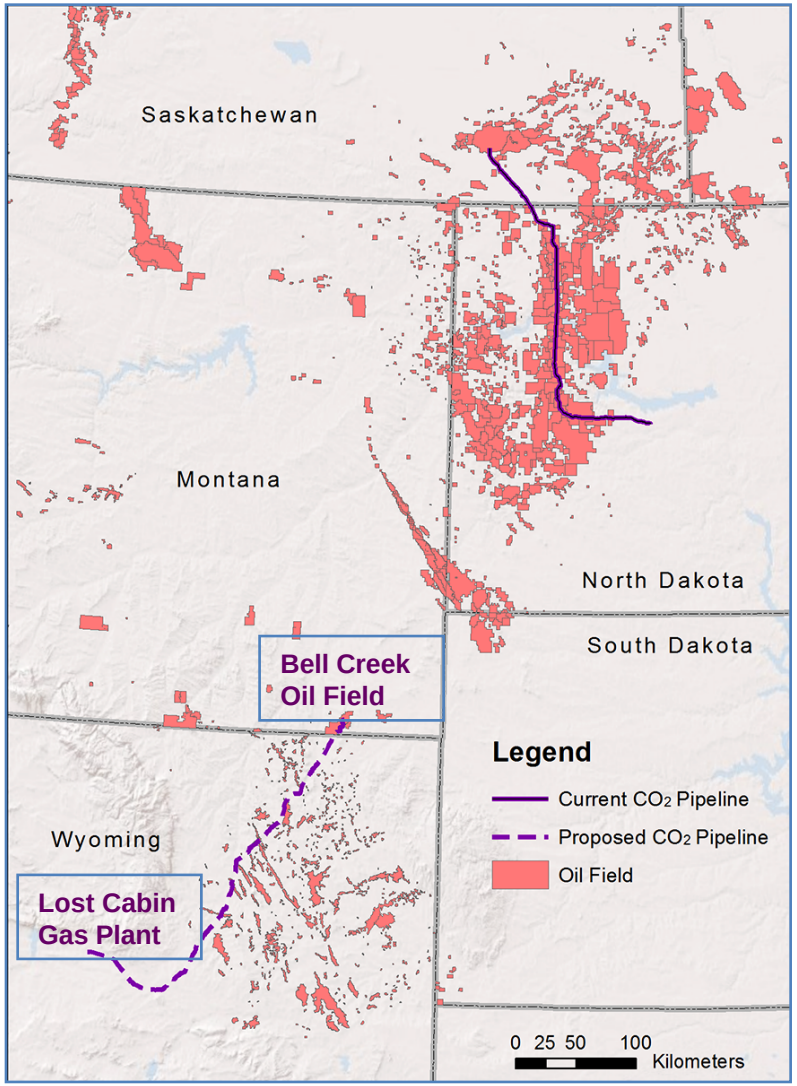

PCOR Partnership Status

We are moving ahead with both the Bell Creek and the Fort Nelson demonstrations.

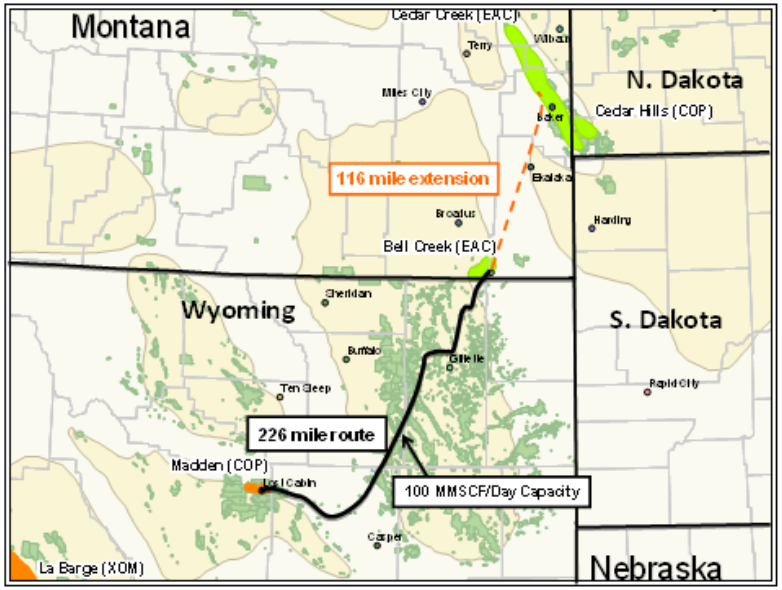

Regional Characterization Activities

- Detailed investigation into the CO_2 storage and EOR potential of the Rival Field in north-central North Dakota
- Joint U.S.–Canada assessment of the basal Cambrian aquifer units of the Western Canadian Sedimentary Basin and Williston Basin.
- Investigation of potential CO_2 storage capacity of the Cedar Hills Formation in western Nebraska.

PCOR Partnership Outreach Support

- 65-page regional sequestration atlas
- Fact sheets on key topics and projects
- A variety of PowerPoint presentations
- Public Web site with streaming and downloadable materials
- Sequestration documentaries (television broadcasts, Web streaming, and DVDs)
- Video clips
- Technical reports

New Report

- Current Status of CO_2 Capture Technology Development and Application
  - Provides an overview of the current status of carbon capture technology development and application.
  - Provides an overview of the technical basis for each separation technique and information on nearly 100 technologies and/or research efforts.

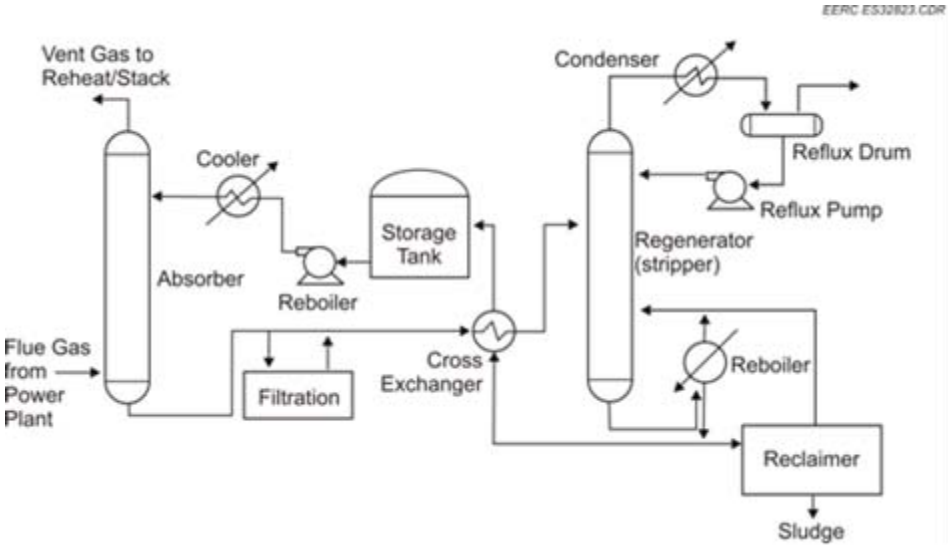

Carbon Management

- A carbon management strategy is often required and always desirable for permitting major industrial sources of CO_2 emissions.
- Carbon management options vary significantly based on plant type, economics, geography, and geology.

Monitoring Regulatory Developments

- Staying abreast of the latest regulatory developments is of the utmost importance for the PCOR Partnership. Example:
  - Review and comment on provincial, state, and federal rulemaking
  - Review proposed and enacted provincial, state, and federal legislation
  - Participate in IOGCC's Geological CO_2 Sequestration Task Force and Pipeline Transportation Task Force
  - Participate in Presidential Interagency Task Force on CCS

PCOR Partnership Regulatory Round up

Deadwood, South Dakota
June 16–17, 2009
July 21–22, 2010
Bismarck, North Dakota
June 29-30, 2011

- A gathering of regional regulatory officials to discuss existing and evolving regulatory frameworks for CO_2 transportation and storage.

US EPA Mandatory Greenhouse Gas Reporting Rule (MRR)

- Carbon Dioxide Injection and Geologic Sequestration (Subpart RR)
  - Any well or group of wells that inject CO_2 for long-term geologic storage
  - All wells permitted as UIC Class VI wells
- Injection of Carbon Dioxide (Subpart UU)
  - Any well or group of wells that inject CO2 stream into the subsurface that does not report under Subpart RR (i.e. EOR business as usual)
  - R&D projects receiving a Subpart RR exemption

US EPA Geologic Sequestration Well

- Finalized new well class (Class VI) under the Safe Drinking Water Act's Underground Injection Control (UIC) Program
  - Site characterization requirements
  - AoR delineation and reevaluation
  - Well construction and operation requirements
  - Testing and monitoring requirements
  - Site-specific project plan development
  - Financial responsibility for the life of the project
  - Post-injection site care monitoring – 50 yr default
  - Injection depth waiver
  - Provides consideration for wells transitioning from Class II (enhanced resource recovery wells) to Class VI (straight storage wells)

US EPA Proposed RCRA Exclusion

- Proposed in August 2011
- CO_2 streams can be “conditionally excluded” from RCRA consideration for storage purposes
- Streams must be:
  - Captured from industrial sources
  - Injected into a Class VI well
- Expect rule to be finalized by early 2013

Contact Information

Energy & Environmental Research Center
University of North Dakota
15 North 23rd Street, Stop 9018
Grand Forks, North Dakota 58202-9018

World Wide Web: **www.undeerc.org**
Telephone No. (701) 777-5355
Fax No. (701) 777-5181

Lisa S. Botnen
Research Manager
lbotnen@undeerc.org